REVISION LIST							
ITEM	ECN NO.	POSITION	DESCRIPTION		DATE	UPDATED BY	APPROVED BY
			NEW	OLD			

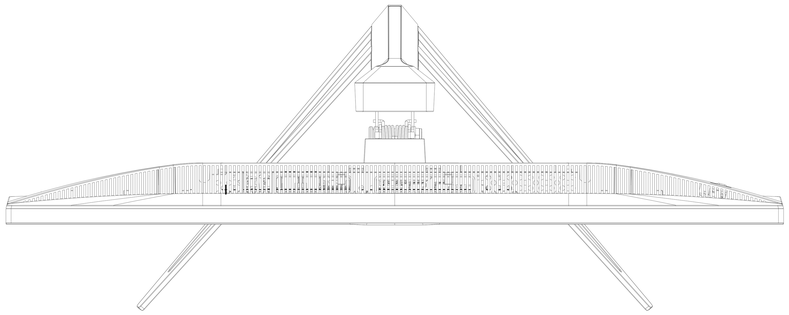

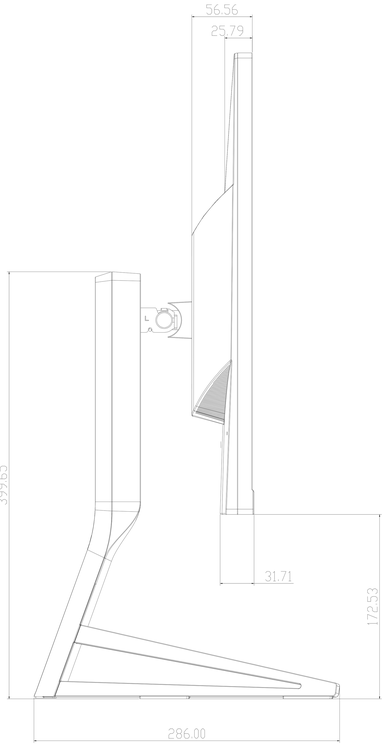

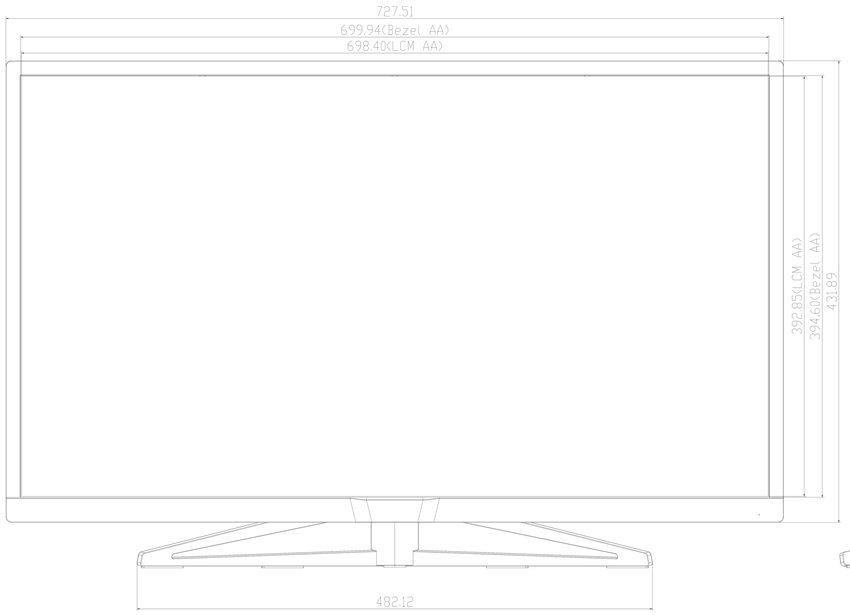

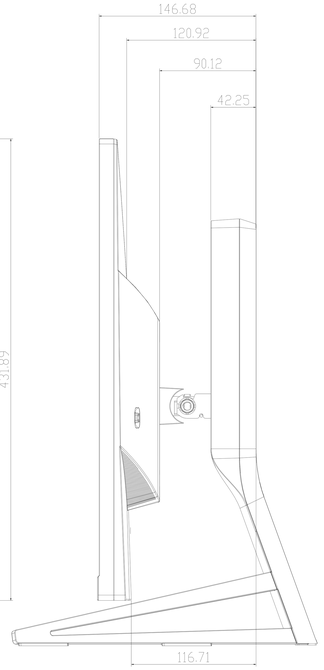

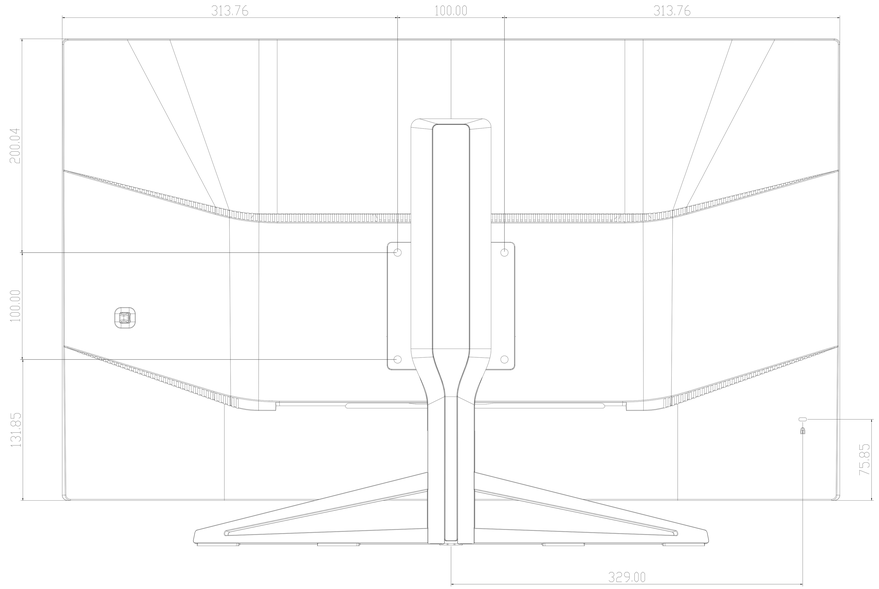

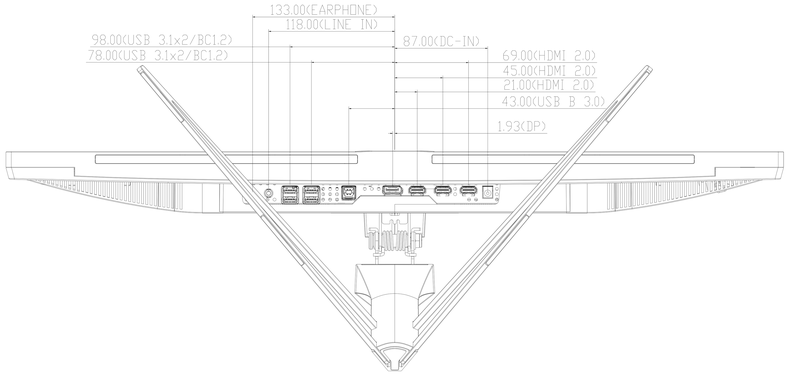

CLEARANCE UNLESS OTHERWISE SPECIFIED mm			
RANGE OF DIM	MCHN & PLASTIC	SHEET METAL	SHFTPN
0~10	±0.05	±0.10	±0.05
10~50	±0.10	±0.15	
50~120	±0.15	±0.20	±0.10
120~300	±0.20	±0.25	
300~500	±0.25	±0.30	
500~1000	±0.30	±0.35	±0.15
1000~4000	±0.50	±0.40	±0.20
ANGLE TOLERANCE		±0°	±0.5°
Internal Detailer of Plastic Screw Boss		±0.05	

MODEL: PHP_32NQHF_02B_SHT01	FILE: 03-00-PHP_32NQHF_ASSY
UNIT: MM	TOLERANCE UNLESS OTHERWISE ANGLE	DRAWING: TBD
SCALE: 1:10	Ra: 1.6	MATERIAL: TBD
SHEET: 1 OF 1		DRAWN: TBD
DRAWN:	MATERIAL:	ID No.: TPV	TECPRODUCT	2024/02
CHECK:		DATE:		

RoHS