REVISION LIST							
ITEM	ECN NO.	POSITION	REVISION LIST ZONE		DATE	APPROVED BY	APPROVED BY
			X-AXIS	Y-AXIS			

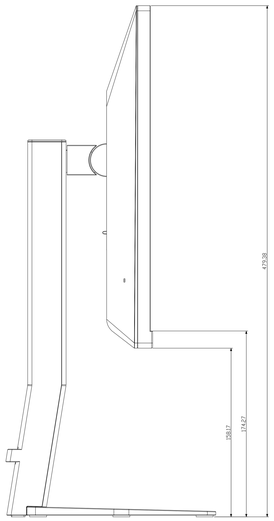

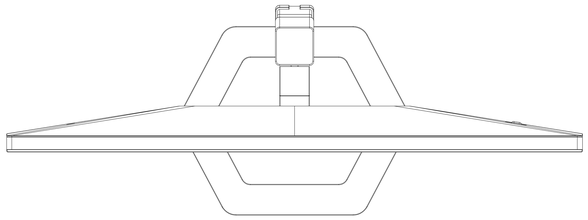

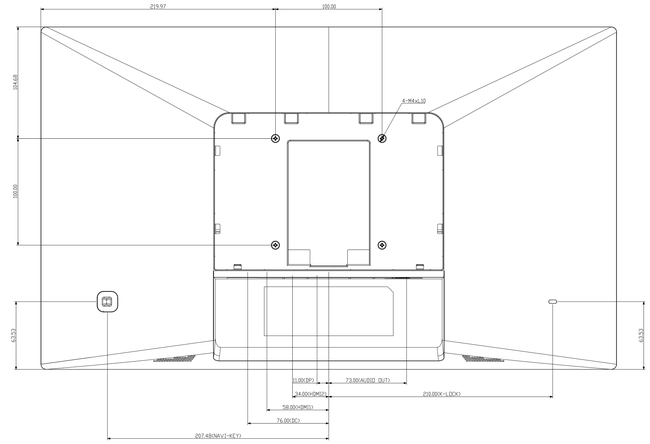

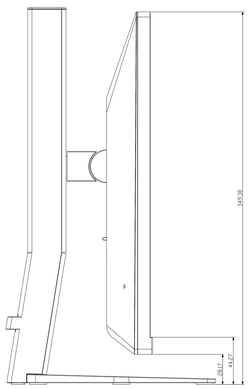

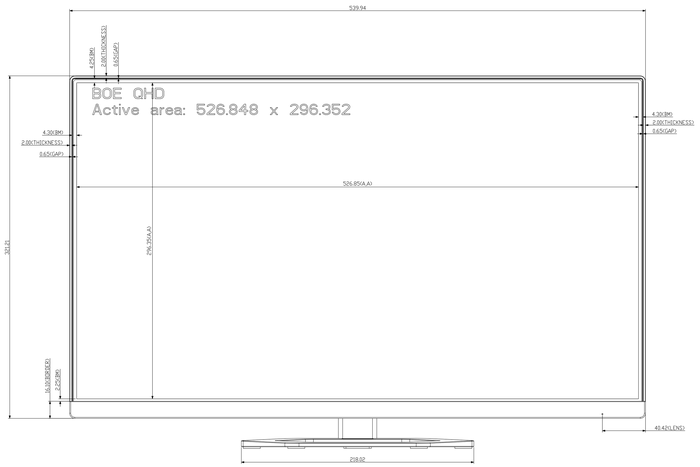

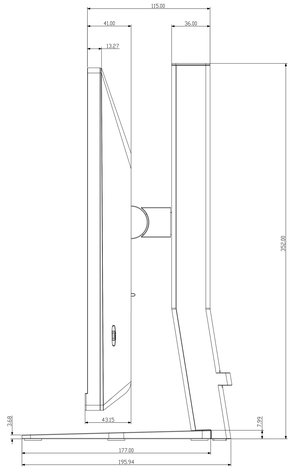

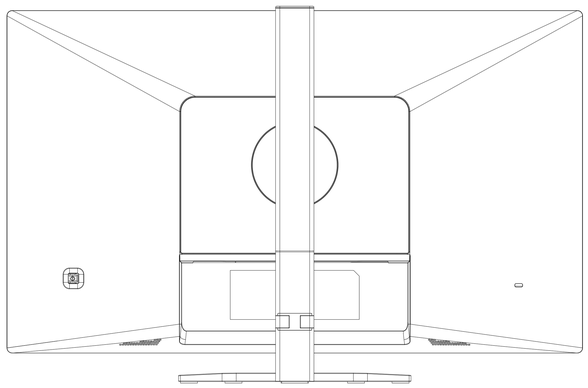

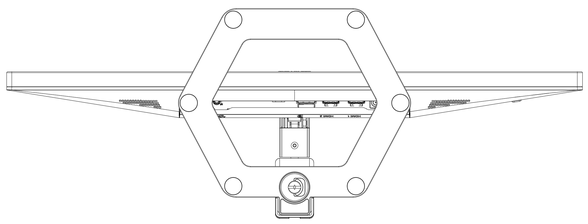

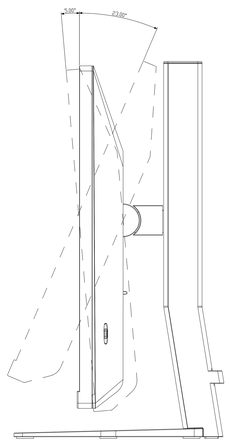

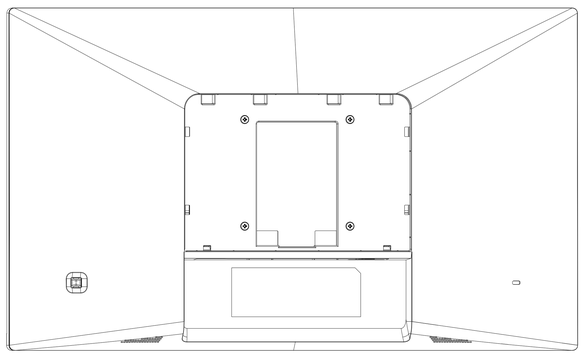

Key View

TOLERANCE UNLESS OTHERWISE SPECIFIED (mm)			
RANGE OF DIM.	METAL & PLASTIC	FILITEAM	CARTON
0~6	±0.05	±0.5~2.0	±2.0~5
6~18	±0.05		
18~30	±0.05		
30~120	±0.05		
120~315	±0.05		
315~1000	±0.05		
1000~1500	±0.05	±0.5~2.0	
1500~2000	±0.05	±0.5~4.0	
ANGLE (DEG) METALL		±1.0°	
Internal Diameter of Plastic Screw Boss		±0.05	

REV:		PRE D-BELIM /KOREA EL	PRE D-BELIM /KOREA,EY
UNIT: PCS	TOLERANCE UNLESS THERWISE STATED DIMENSIONS ANGLE		
SCALE: 1:6	3rd ANGLE PROJECTION		
DRAWN	DATE Feb-13-2014	TPV Technology	3-13-2014
CHK'D	DATE		3-13-2014

RoHS